OEM Enclosures – PC or ABS

Series 12 with plain Sides and metric or PG Knockouts

Manufactured from high performance Thermoplastic, Polycarbonate or ABS. These Enclosures are suitable for demanding OEM applications, e.g. for the protection of electronic and pneumatic components.

This series includes small and medium sized universal Enclosures made of Polycarbonate with metric or PG knockouts.
The Enclosures are available in increments of 25 mm (1"), e.g. 75 x 125 x 75 to 175 x 250 x 150 mm.

The following approved Enclosures are available upon request:

Technical Information	Polycarbonate	ABS
Protection EN 60529	IP 66 / 67	IP 66 / 67
Impact EN 50102	IK 08 / IK 08	IK 07 / IK 06
(+35 °C / -25 °C)		
Temperature range	-50 °C...+100 °C	-40 °C...+60 °C
Fire resistance per UL 94	V-2	HB
Standard color	Grey RAL 7035	Grey RAL 7035
Transparent cover	Polycarbonate	Polycarbonate
Gasket	PUR (Polyurethane)	PUR (Polyurethane)
Cover screws	Nylon	Nylon

Mid size Enclosures made of Polycarbonate or ABS

2.95 x 4.92 x 2.95" (75 x 125 x 75 mm)

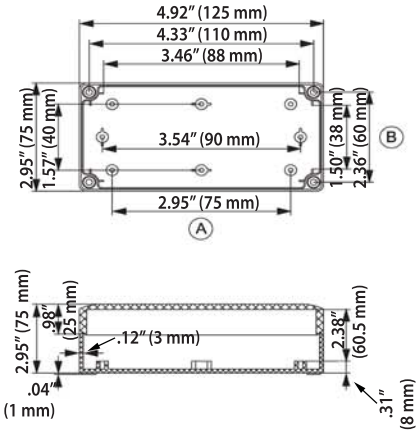

Polycarbonate	Part Number
Grey cover, plain sides	3.120.0550.31
Grey cover, metric knockouts, A: 3 x ø12mm/20mm B: 1 x ø16mm/25mm	3.120.0663.58
Grey cover, PG knockouts, A: 3 x PG 9/PG 13,5 B: 1 x PG 9/PG 13,5	3.120.0550.00
Transp. cover*, plain sides	3.120.0550.24
Transp. cover*, metric knockouts, A: 3 x ø12mm/20mm B: 1 x ø16mm/25mm	3.120.0665.25
Transp. cover*, PG knockouts, A: 3 x PG 9/PG 13,5 B: 1 x PG 9/PG 13,5	3.120.0550.17

ABS	Part Number
Grey cover, plain sides	3.120.0550.48
Transp. cover*, plain sides	3.120.0550.55

Accessories	Part Number
Mounting plate, 1,5 mm thick, galvanized steel	3.120.0560.38
DIN Rail, DIN 35, short side	3.120.0560.90
DIN Rail, DIN 35, long side	3.120.0561.06

Assembly and machining services of your enclosures are available upon request.
Drawings with additional dimensions can be furnished upon request.
Cover screws and assembly screws are included.
*Transparent cover always out of Polycarbonate

Additional accessories on page 35.

2.95 x 4.92 x 3.94" (75 x 125 x 100 mm)

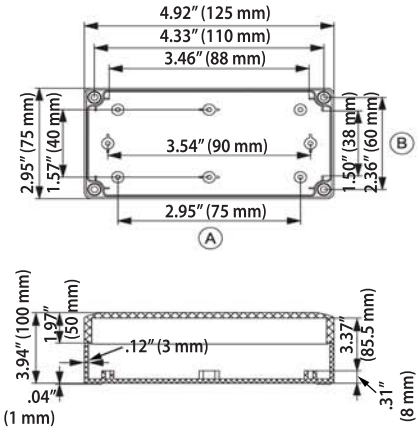

Polycarbonate	Part Number
Grey cover, plain sides	3.120.0550.86
Grey cover, metric knockouts, A: 3 x ø12mm/20mm B: 1 x ø16mm/25mm	3.120.0663.65
Grey cover, PG knockouts, A: 3 x PG 9/PG 13,5 B: 1 x PG 9/PG 13,5	3.120.0550.62
Transp. cover*, plain sides	3.120.0550.93
Transp. cover*, metric knockouts, A: 3 x ø12mm/20mm B: 1 x ø16mm/25mm	3.120.0665.32
Transp. cover*, PG knockouts, A: 3 x PG 9/PG 13,5 B: 1 x PG 9/PG 13,5	3.120.0550.79

ABS	Part Number
Grey cover, plain sides	3.120.0551.09
Transp. cover*, plain sides	3.120.0551.16

Accessories	Part Number
Mounting plate, 1,5 mm thick, galvanized steel	3.120.0560.38
DIN Rail, DIN 35, short side	3.120.0560.90
DIN Rail, DIN 35, long side	3.120.0561.06

Assembly and machining services of your enclosures are available upon request.
Drawings with additional dimensions can be furnished upon request.
Cover screws and assembly screws are included.
*Transparent cover always out of Polycarbonate

Additional accessories on page 35.

Mid size Enclosures made of Polycarbonate or ABS

2.95 x 4.92 x 4.92" (75 x 125 x 125 mm)

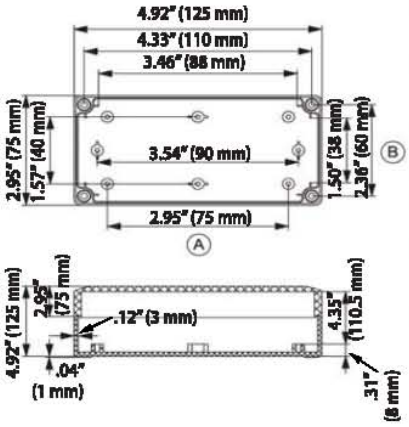

Polycarbonate	Part Number
Grey cover, plain sides	3.120.0551.47
Grey cover, metric knockouts, A: 3 x ø 12 mm / 20 mm B: 1 x ø 16 mm / 25 mm	3.120.0663.72
Grey cover, PG knockouts, A: 3 x PG 9 / PG 13,5 B: 1 x PG 9 / PG 13,5	3.120.0551.23
Transp. cover*, plain sides	3.120.0551.54
Transp. cover*, metric knockouts, A: 3 x ø 12 mm / 20 mm B: 1 x ø 16 mm / 25 mm	3.120.0665.49
Transp. cover*, PG knockouts, A: 3 x PG 9 / PG 13,5 B: 1 x PG 9 / PG 13,5	3.120.0551.30

ABS	Part Number
Grey cover, plain sides	3.120.0551.61
Transp. cover*, plain sides	3.120.0551.78

Assembly and machining services of your enclosures are available upon request.
Drawings with additional dimensions can be furnished upon request.
Cover screws and assembly screws are included.
*Transparent cover always out of Polycarbonate

Accessories	Part Number
Mounting plate, 1,5 mm thick, galvanized steel	3.120.0560.38
DIN Rail, DIN 35, short side	3.120.0560.90
DIN Rail, DIN 35, long side	3.120.0561.06

Additional accessories on page 35.

4.92 x 4.92 x 2.95" (125 x 125 x 75 mm)

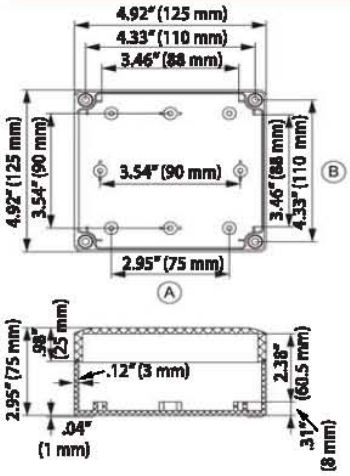

Polycarbonate	Part Number
Grey cover, plain sides	3.120.0552.08
Grey cover, metric knockouts, A: 3 x ø 12 mm / 20 mm B: 2 x ø 16 mm / 25 mm	3.120.0663.89
Grey cover, PG knockouts, A: 3 x PG 9 / PG 13,5 B: 2 x PG 16 / PG 21	3.120.0551.85
Transp. cover*, plain sides	3.120.0552.15
Transp. cover*, metric knockouts, A: 3 x ø 12 mm / 20 mm B: 2 x ø 16 mm / 25 mm	3.120.0665.56
Transp. cover*, PG knockouts, A: 3 x PG 9 / PG 13,5 B: 2 x PG 16 / PG 21	3.120.0551.92

ABS	Part Number
Grey cover, plain sides	3.120.0552.22
Transp. cover*, plain sides	3.120.0552.39

Assembly and machining services of your enclosures are available upon request.
Drawings with additional dimensions can be furnished upon request.
Cover screws and assembly screws are included.
*Transparent cover always out of Polycarbonate

Accessories	Part Number
Mounting plate, 1,5 mm thick, galvanized steel	3.120.0560.45
DIN Rail, DIN 35	3.120.0561.06

Additional accessories on page 35.

Mid size Enclosures made of Polycarbonate or ABS

4.92 x 4.92 x 3.94" (125 x 125 x 100 mm)

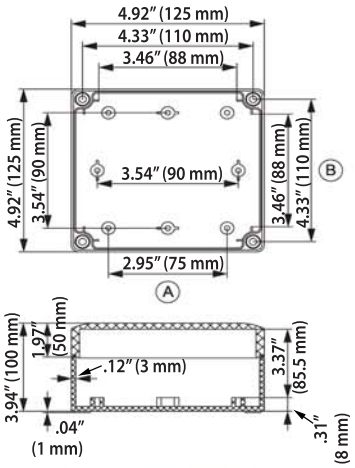

Polycarbonate	Part Number
Grey cover, plain sides	3.120.0552.60
Grey cover, metric knockouts, A: 3 x ø 12 mm / 20 mm B: 2 x ø 16 mm / 25 mm	3.120.0663.96
Grey cover, PG knockouts, A: 3 x PG 9 / PG 13,5 B: 2 x PG 16 / PG 21	3.120.0552.46
Transp. cover*, plain sides	3.120.0552.77
Transp. cover*, metric knockouts, A: 3 x ø 12 mm / 20 mm B: 2 x ø 16 mm / 25 mm	3.120.0665.63
Transp. cover*, PG knockouts, A: 3 x PG 9 / PG 13,5 B: 2 x PG 16 / PG 21	3.120.0552.53

ABS	Part Number
Grey cover, plain sides	3.120.0552.84
Transp. cover*, plain sides	3.120.0552.91

Assembly and machining services of your enclosures are available upon request.
Drawings with additional dimensions can be furnished upon request.
Cover screws and assembly screws are included.
*Transparent cover always out of Polycarbonate

Accessories	Part Number
Mounting plate, 1,5 mm thick, galvanized steel	3.120.0560.45
DIN Rail, DIN 35	3.120.0561.06

Additional accessories on page 35.

4.92 x 4.92 x 4.92" (125 x 125 x 125 mm)

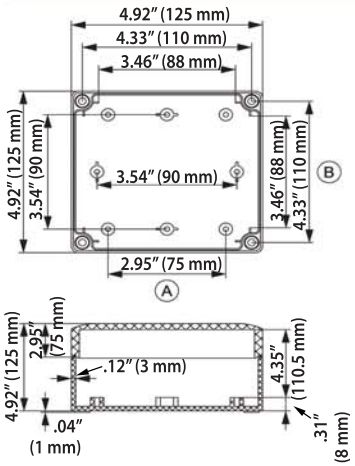

Polycarbonate	Part Number
Grey cover, plain sides	3.120.0553.21
Grey cover, metric knockouts, A: 3 x ø 12 mm / 20 mm B: 2 x ø 16 mm / 25 mm	3.120.0664.02
Grey cover, PG knockouts, A: 3 x PG 9 / PG 13,5 B: 2 x PG 16 / PG 21	3.120.0553.07
Transp. cover*, plain sides	3.120.0553.38
Transp. cover*, metric knockouts, A: 3 x ø 12 mm / 20 mm B: 2 x ø 16 mm / 25 mm	3.120.0665.70
Transp. cover*, PG knockouts, A: 3 x PG 9 / PG 13,5 B: 2 x PG 16 / PG 21	3.120.0553.14

ABS	Part Number
Grey cover, plain sides	3.120.0553.45
Transp. cover*, plain sides	3.120.0553.52

Assembly and machining services of your enclosures are available upon request.
Drawings with additional dimensions can be furnished upon request.
Cover screws and assembly screws are included.
*Transparent cover always out of Polycarbonate

Accessories	Part Number
Mounting plate, 1,5 mm thick, galvanized steel	3.120.0560.45
DIN Rail, DIN 35	3.120.0561.06

Additional accessories on page 35.

Mid size Enclosures made of Polycarbonate or ABS

4.92 x 6.89 x 2.95" (125 x 175 x 75 mm)

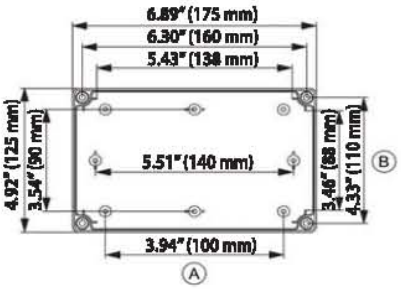

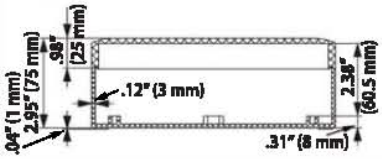

Polycarbonate	Part Number
Grey cover, plain sides	3.120.0553.83
Grey cover, metric knockouts, A: 4 x ø 12 mm / 20 mm B: 2 x ø 16 mm / 25 mm	3.120.0664.19
Grey cover, PG knockouts, A: 4 x PG 9 / PG 13,5 B: 2 x PG 16 / PG 21	3.120.0553.69
Transp. cover*, plain sides	3.120.0553.90
Transp. cover*, metric knockouts, A: 4 x ø 12 mm / 20 mm B: 2 x ø 16 mm / 25 mm	3.120.0665.87
Transp. cover*, PG knockouts, A: 4 x PG 9 / PG 13,5 B: 2 x PG 16 / PG 21	3.120.0553.76

ABS	Part Number
Grey cover, plain sides	3.120.0554.06
Transp. cover*, plain sides	3.120.0554.13

Assembly and machining services of your enclosures are available upon request.
Drawings with additional dimensions can be furnished upon request.
Cover screws and assembly screws are included.
*Transparent cover always out of Polycarbonate

Accessories	Part Number
Mounting plate, 1,5 mm thick, galvanized steel	3.120.0560.52
DIN Rail, DIN 35, short side	3.120.0561.06
DIN Rail, DIN 35, long side	3.120.0561.13

Additional accessories on page 35.

4.92 x 6.89 x 3.94" (125 x 175 x 100 mm)

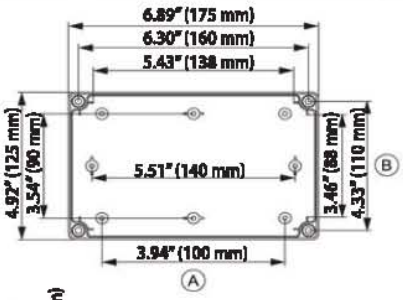

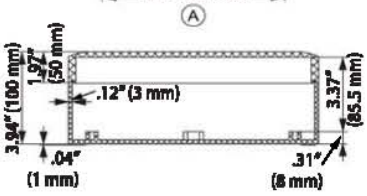

Polycarbonate	Part Number
Grey cover, plain sides	3.120.0554.44
Grey cover, metric knockouts, A: 4 x ø 12 mm / 20 mm B: 2 x ø 16 mm / 25 mm	3.120.0664.26
Grey cover, PG knockouts, A: 4 x PG 9 / PG 13,5 B: 2 x PG 16 / PG 21	3.120.0554.20
Transp. cover*, plain sides	3.120.0554.51
Transp. cover*, metric knockouts, A: 4 x ø 12 mm / 20 mm B: 2 x ø 16 mm / 25 mm	3.120.0665.94
Transp. cover*, PG knockouts, A: 4 x PG 9 / PG 13,5 B: 2 x PG 16 / PG 21	3.120.0554.37

ABS	Part Number
Grey cover, plain sides	3.120.0554.68
Transp. cover*, plain sides	3.120.0554.75

Assembly and machining services of your enclosures are available upon request.
Drawings with additional dimensions can be furnished upon request.
Cover screws and assembly screws are included.
*Transparent cover always out of Polycarbonate

Accessories	Part Number
Mounting plate, 1,5 mm thick, galvanized steel	3.120.0560.52
DIN Rail, DIN 35, short side	3.120.0561.06
DIN Rail, DIN 35, long side	3.120.0561.13

Additional accessories on page 35.

Mid size Enclosures made of Polycarbonate or ABS

4.92 x 6.89 x 4.92" (125 x 175 x 125 mm)

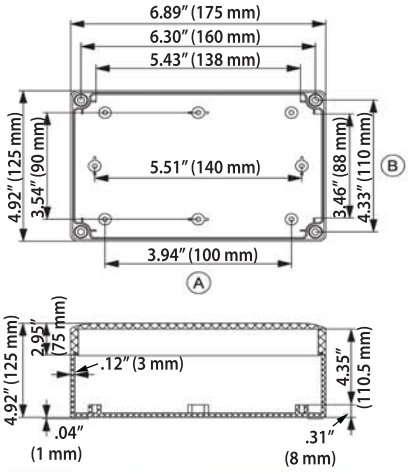

Polycarbonate	Part Number
Grey cover, plain sides	3.120.0555.05
Grey cover, metric knockouts, A: 4 x ø 12 mm / 20 mm B: 2 x ø 16 mm / 25 mm	3.120.0664.33
Grey cover, PG knockouts, A: 4 x PG 9 / PG 13,5 B: 2 x PG 16 / PG 21	3.120.0554.82
Transp. cover*, plain sides	3.120.0555.12
Transp. cover*, metric knockouts, A: 4 x ø 12 mm / 20 mm B: 2 x ø 16 mm / 25 mm	3.120.0666.00
Transp. cover*, PG knockouts, A: 4 x PG 9 / PG 13,5 B: 2 x PG 16 / PG 21	3.120.0554.99

ABS	Part Number
Grey cover, plain sides	3.120.0555.29
Transp. cover*, plain sides	3.120.0555.36

Assembly and machining services of your enclosures are available upon request.
Drawings with additional dimensions can be furnished upon request.
Cover screws and assembly screws are included.
*Transparent cover always out of Polycarbonate

Accessories	Part Number
Mounting plate, 1,5 mm thick, galvanized steel	3.120.0560.52
DIN Rail, DIN 35, short side	3.120.0561.06
DIN Rail, DIN 35, long side	3.120.0561.13

Additional accessories on page 35.

4.92 x 6.89 x 5.91" (125 x 175 x 150 mm)

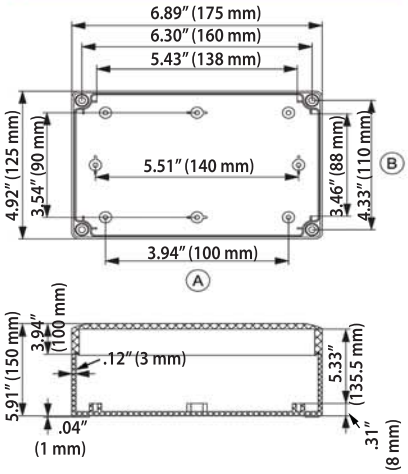

Polycarbonate	Part Number
Grey cover, plain sides	3.120.0555.67
Grey cover, metric knockouts, A: 4 x ø 12 mm / 20 mm B: 2 x ø 16 mm / 25 mm	3.120.0664.40
Grey cover, PG knockouts, A: 4 x PG 9 / PG 13,5 B: 2 x PG 16 / PG 21	3.120.0555.43
Transp. cover*, plain sides	3.120.0555.74
Transp. cover*, metric knockouts, A: 4 x ø 12 mm / 20 mm B: 2 x ø 16 mm / 25 mm	3.120.0666.17
Transp. cover*, PG knockouts, A: 4 x PG 9 / PG 13,5 B: 2 x PG 16 / PG 21	3.120.0555.50

ABS	Part Number
Grey cover, plain sides	3.120.0555.81
Transp. cover*, plain sides	3.120.0555.98

Assembly and machining services of your enclosures are available upon request.
Drawings with additional dimensions can be furnished upon request.
Cover screws and assembly screws are included.
*Transparent cover always out of Polycarbonate

Accessories	Part Number
Mounting plate, 1,5 mm thick, galvanized steel	3.120.0560.52
DIN Rail, DIN 35, short side	3.120.0561.06
DIN Rail, DIN 35, long side	3.120.0561.13

Additional accessories on page 35.

Mid size Enclosures made of Polycarbonate or ABS

6.89 x 6.89 x 2.95" (175 x 175 x 75 mm)

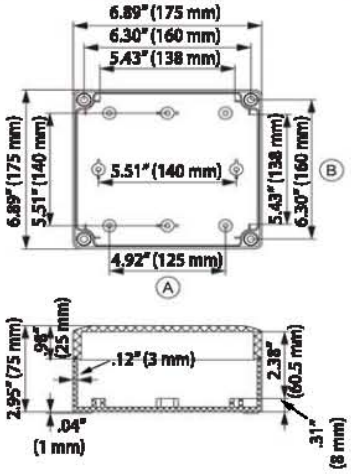

Polycarbonate	Part Number
Grey cover, plain sides	3.120.0556.28
Grey cover, metric knockouts, A: 5 x ø 12 mm / 20 mm B: 2 x ø 12 mm / 20 mm + 2 x ø 16 mm / 25 mm	3.120.0664.57
Grey cover, PG knockouts, A: 5 x PG 9 / PG 13,5 B: 2 x PG 16 / PG 21 + 2 x PG 9 / PG 16	3.120.0556.04
Transp. cover*, plain sides	3.120.0556.35
Transp. cover*, metric knockouts, A: 5 x ø 12 mm / 20 mm B: 2 x ø 12 mm / 20 mm + 2 x ø 16 mm / 25 mm	3.120.0666.24
Transp. cover*, PG knockouts, A: 5 x PG 9 / PG 13,5 B: 2 x PG 16 / PG 21 + 2 x PG 9 / PG 16	3.120.0556.11

ABS	Part Number
Grey cover, plain sides	3.120.0556.42
Transp. cover*, plain sides	3.120.0556.59

Assembly and machining services of your enclosures are available upon request.
Drawings with additional dimensions can be furnished upon request.
Cover screws and assembly screws are included.
*Transparent cover always out of Polycarbonate

Accessories	Part Number
Mounting plate, 1,5 mm thick, galvanized steel	3.120.0560.69
DIN Rail, DIN 35	3.120.0561.13

Additional accessories on page 35.

6.89 x 6.89 x 3.94" (175 x 175 x 100 mm)

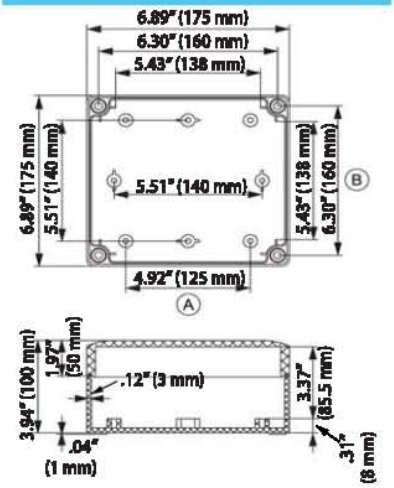

Polycarbonate	Part Number
Grey cover, plain sides	3.120.0556.80
Grey cover, metric knockouts, A: 5 x ø 12 mm / 20 mm B: 2 x ø 12 mm / 20 mm + 2 x ø 16 mm / 25 mm	3.120.0664.64
Grey cover, PG knockouts, A: 5 x PG 9 / PG 13,5 B: 2 x PG 16 / PG 21 + 2 x PG 9 / PG 16	3.120.0556.66
Transp. cover*, plain sides	3.120.0556.97
Transp. cover*, metric knockouts, A: 5 x ø 12 mm / 20 mm B: 2 x ø 12 mm / 20 mm + 2 x ø 16 mm / 25 mm	3.120.0666.31
Transp. cover*, PG knockouts, A: 5 x PG 9 / PG 13,5 B: 2 x PG 16 / PG 21 + 2 x PG 9 / PG 16	3.120.0556.73

ABS	Part Number
Grey cover, plain sides	3.120.0557.03
Transp. cover*, plain sides	3.120.0557.10

Assembly and machining services of your enclosures are available upon request.
Drawings with additional dimensions can be furnished upon request.
Cover screws and assembly screws are included.
*Transparent cover always out of Polycarbonate

Accessories	Part Number
Mounting plate, 1,5 mm thick, galvanized steel	3.120.0560.69
DIN Rail, DIN 35	3.120.0561.13

Additional accessories on page 35.

Mid size Enclosures made of Polycarbonate or ABS

6.89 x 6.89 x 4.92" (175 x 175 x 125 mm)

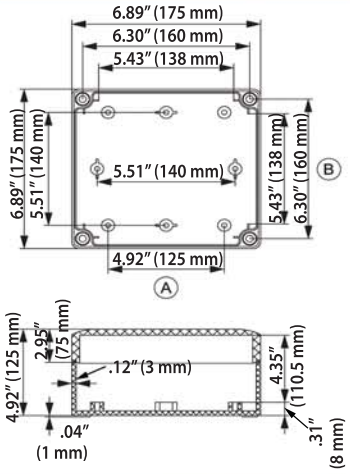

Polycarbonate	Part Number
Grey cover, plain sides	3.120.0557.41
Grey cover, metric knockouts, A: 5 x ø 12 mm / 20 mm B: 2 x ø 12 mm / 20 mm + 2 x ø 16 mm / 25 mm	3.120.0664.71
Grey cover, PG knockouts, A: 5 x PG 9 / PG 13,5 B: 2 x PG 16 / PG 21 + 2 x PG 9 / PG 16	3.120.0557.27
Transp. cover*, plain sides	3.120.0557.58
Transp. cover*, metric knockouts, A: 5 x ø 12 mm / 20 mm B: 2 x ø 12 mm / 20 mm + 2 x ø 16 mm / 25 mm	3.120.0666.48
Transp. cover*, PG knockouts, A: 5 x PG 9 / PG 13,5 B: 2 x PG 16 / PG 21 + 2 x PG 9 / PG 16	3.120.0557.34

ABS	Part Number
Grey cover, plain sides	3.120.0557.65
Transp. cover*, plain sides	3.120.0557.72

Assembly and machining services of your enclosures are available upon request.
Drawings with additional dimensions can be furnished upon request.
Cover screws and assembly screws are included.
*Transparent cover always out of Polycarbonate

Accessories	Part Number
Mounting plate, 1,5 mm thick, galvanized steel	3.120.0560.69
DIN Rail, DIN 35	3.120.0561.13

Additional accessories on page 35.

6.89 x 6.89 x 5.91" (175 x 175 x 150 mm)

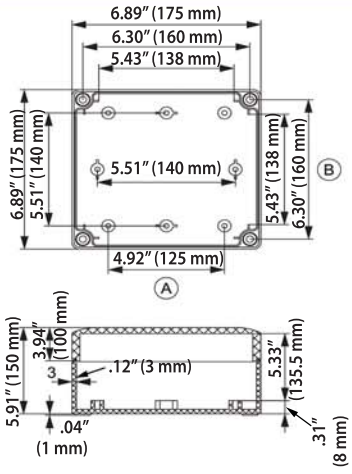

Polycarbonate	Part Number
Grey cover, plain sides	3.120.0558.02
Grey cover, metric knockouts, A: 5 x ø 12 mm / 20 mm B: 2 x ø 12 mm / 20 mm + 2 x ø 16 mm / 25 mm	3.120.0664.88
Grey cover, PG knockouts, A: 5 x PG 9 / PG 13,5 B: 2 x PG 16 / PG 21 + 2 x PG 9 / PG 16	3.120.0557.89
Transp. cover*, plain sides	3.120.0558.19
Transp. cover*, metric knockouts, A: 5 x ø 12 mm / 20 mm B: 2 x ø 12 mm / 20 mm + 2 x ø 16 mm / 25 mm	3.120.0666.55
Transp. cover*, PG knockouts, A: 5 x PG 9 / PG 13,5 B: 2 x PG 16 / PG 21 + 2 x PG 9 / PG 16	3.120.0557.96

ABS	Part Number
Grey cover, plain sides	3.120.0558.26
Transp. cover*, plain sides	3.120.0558.33

Assembly and machining services of your enclosures are available upon request.
Drawings with additional dimensions can be furnished upon request.
Cover screws and assembly screws are included.
*Transparent cover always out of Polycarbonate

Accessories	Part Number
Mounting plate, 1,5 mm thick, galvanized steel	3.120.0560.69
DIN Rail, DIN 35, short side	3.120.0561.13

Additional accessories on page 35.

Mid size Enclosures made of Polycarbonate or ABS

6.89 x 9.84 x 2.95" (175 x 250 x 75 mm)

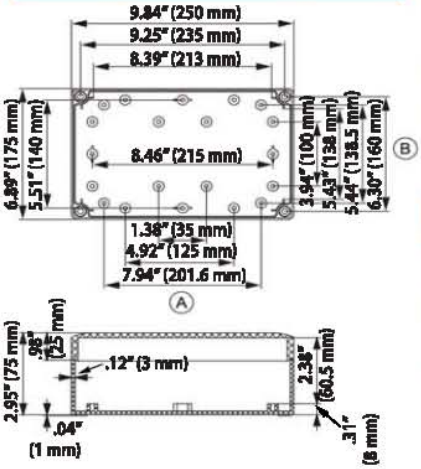

Polycarbonate	Part Number
Grey cover, plain sides	3.120.0558.64
Grey cover, metric knockouts, A: 6 x ø 12 mm / 20 mm B: 2 x ø 12 mm / 20 mm + 2 x ø 16 mm / 25 mm	3.120.0664.95
Grey cover, PG knockouts, A: 6 x PG 9 / PG 13,5 B: 2 x PG 16 / PG 21 + 2 x PG 9 / PG 16	3.120.0558.40
Transp. cover*, plain sides	3.120.0558.71
Transp. cover*, metric knockouts, A: 6 x ø 12 mm / 20 mm B: 2 x ø 12 mm / 20 mm + 2 x ø 16 mm / 25 mm	3.120.0666.62
Transp. cover*, PG knockouts, A: 6 x PG 9 / PG 13,5 B: 2 x PG 16 / PG 21 + 2 x PG 9 / PG 16	3.120.0558.57

ABS	Part Number
Grey cover, plain sides	3.120.0558.88
Transp. cover*, plain sides	3.120.0558.95

Assembly and machining services of your enclosures are available upon request.
Drawings with additional dimensions can be furnished upon request.
Cover screws and assembly screws are included.
*Transparent cover always out of Polycarbonate

Accessories	Part Number
Mounting plate, 1,5 mm thick, galvanized steel	3.120.0560.76
DIN Rail, DIN 35, short side	3.120.0561.13
DIN Rail, DIN 35, long side	3.120.0561.20

Additional accessories on page 35.

6.89 x 9.84 x 3.94" (175 x 250 x 100 mm)

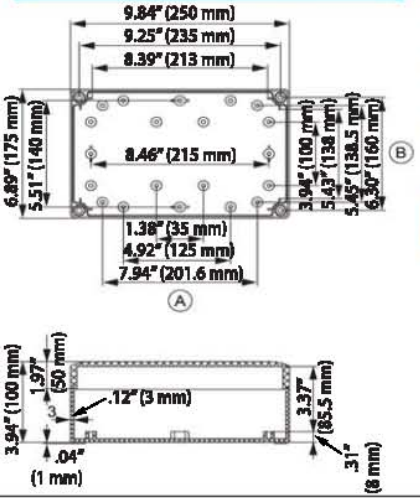

Polycarbonate	Part Number
Grey cover, plain sides	3.120.0559.25
Grey cover, metric knockouts, A: 6 x ø 12 mm / 20 mm B: 2 x ø 12 mm / 20 mm + 2 x ø 16 mm / 25 mm	3.120.0665.01
Grey cover, PG knockouts, A: 6 x PG 9 / PG 13,5 B: 2 x PG 16 / PG 21 + 2 x PG 9 / PG 16	3.120.0559.01
Transp. cover*, plain sides	3.120.0559.32
Transp. cover*, metric knockouts, A: 6 x ø 12 mm / 20 mm B: 2 x ø 12 mm / 20 mm + 2 x ø 16 mm / 25 mm	3.120.0666.79
Transp. cover*, PG knockouts, A: 6 x PG 9 / PG 13,5 B: 2 x PG 16 / PG 21 + 2 x PG 9 / PG 16	3.120.0559.18

ABS	Part Number
Grey cover, plain sides	3.120.0559.49
Transp. cover*, plain sides	3.120.0559.56

Assembly and machining services of your enclosures are available upon request.
Drawings with additional dimensions can be furnished upon request.
Cover screws and assembly screws are included.
*Transparent cover always out of Polycarbonate

Accessories	Part Number
Mounting plate, 1,5 mm thick, galvanized steel	3.120.0560.76
DIN Rail, DIN 35, short side	3.120.0561.13
DIN Rail, DIN 35, long side	3.120.0561.20

Additional accessories on page 35.

Mid size Enclosures made of Polycarbonate or ABS

6.89 x 9.84 x 5.91" (175 x 250 x 150 mm)

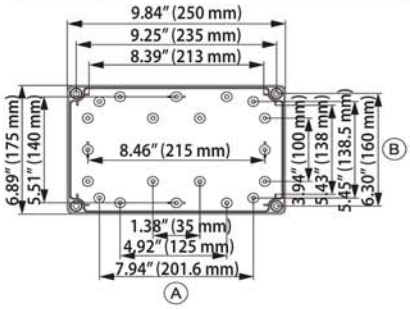

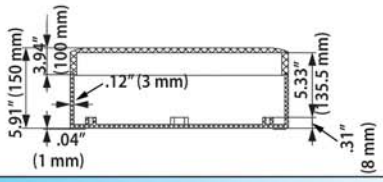

Polycarbonate	Part Number
Grey cover, plain sides	3.120.0559.87
Grey cover, metric knockouts, A: 6 x ø 12 mm / 20 mm B: 2 x ø 12 mm / 20 mm + 2 x ø 16 mm / 25 mm	3.120.0665.18
Grey cover, PG knockouts, A: 6 x PG 9 / PG 13,5 B: 2 x PG 16 / PG 21 + 2 x PG 9 / PG 16	3.120.0559.63
Transp. cover*, plain sides	3.120.0559.94
Transp. cover*, metric knockouts, A: 6 x ø 12 mm / 20 mm B: 2 x ø 12 mm / 20 mm + 2 x ø 16 mm / 25 mm	3.120.0666.86
Transp. cover*, PG knockouts, A: 6 x PG 9 / PG 13,5 B: 2 x PG 16 / PG 21 + 2 x PG 9 / PG 16	3.120.0559.70

ABS	Part Number
Grey cover, plain sides	3.120.0560.07
Transp. cover*, plain sides	3.120.0560.14

Assembly and machining services of your enclosures are available upon request.
Drawings with additional dimensions can be furnished upon request.
Cover screws and assembly screws are included.
*Transparent cover always out of Polycarbonate

Accessories	Part Number
Mounting plate, 1,5 mm thick, galvanized steel	3.120.0560.76
DIN Rail, DIN 35, short side	3.120.0561.13
DIN Rail, DIN 35, long side	3.120.0561.20

Additional accessories on page 35.

Accessories for Series 12.

Series 12 – Accessories

Accessories

Hinges	Size inches (mm)	Part Number
Pair, polycarbate	1.10 x 1.10 x .39" (28 x 28 x 10 mm)	3.811.0561.44

Accessories

Outside Latches	Size inches (mm)	Part Number
Set, Polycarbonate	.59 x 1.18" (15 x 30 mm)	3. 812.0561.51

Accessories

Cover Plugs	Size mm (inches)	Part Number
Short, 25 mm cover, polyethylene	.43 x .47" (ø11 x 12 mm)	3.812.0568.47
Long, for 50 mm cover, polyethylene	.43 x 1.44" (ø12 x 36.5 mm)	3.812.0568.54
Short, for 50 & 100 mm cover, polyethylene	.45 x .47" (ø11.5 x 12 mm)	3.812.0568.61

Accessories

Wing Head Part	Size inches (mm)	Part Number
Wing head part for cover screws	.43 x .67" (11 x 17 mm)	3.812.0561.51

Accessories

Cover- and Mounting Screws	Size inches (mm)	Part Number
Cover screws, short, steel	.43 x 1.38" (11 x 35 mm)	3.812.0561.82
Cover screws, long for 50 mm cover, steel	.43 x 2.36" (11 x 60 mm)	3.812.0561.99
Mounting screws for plates and rails, steel	.16 x .31" (4 x 8 mm)	3.812.0561.75
Set 1, 4 cover screws short and 4 mounting screws	.43 x 1.38" (11 x 35 mm)	3.812.0549.80
Set 2, 4 cover screws long for, 50 mm cover and 4 mounting screw	.43 x 2.36" (11 x 60 mm)	3.812.0549.97

Accessories

Brass Insert for Mounting Plates	Size inches (mm)	Part Number
Brass Insert	M2	3.812.0561.68
Brass Insert, set incl. 4 pcs.	M2	3.812.0568.30

Did you know ...

...for HUMMEL to build cable assemblies?

We produce fast, flexible and accurate single and multi-conductor cord sets. 100% testing guarantees the highest quality products.

We build:

- Over molded Connectors
- Power Connectors
- Signal Connectors

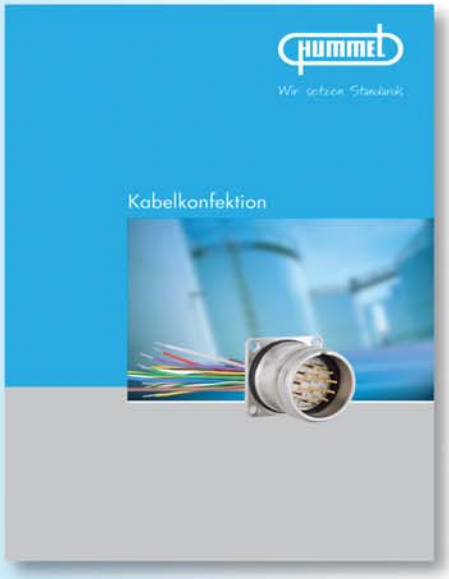

CHALLENGE US!

High precision and quality products