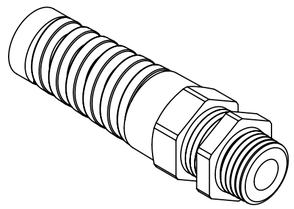

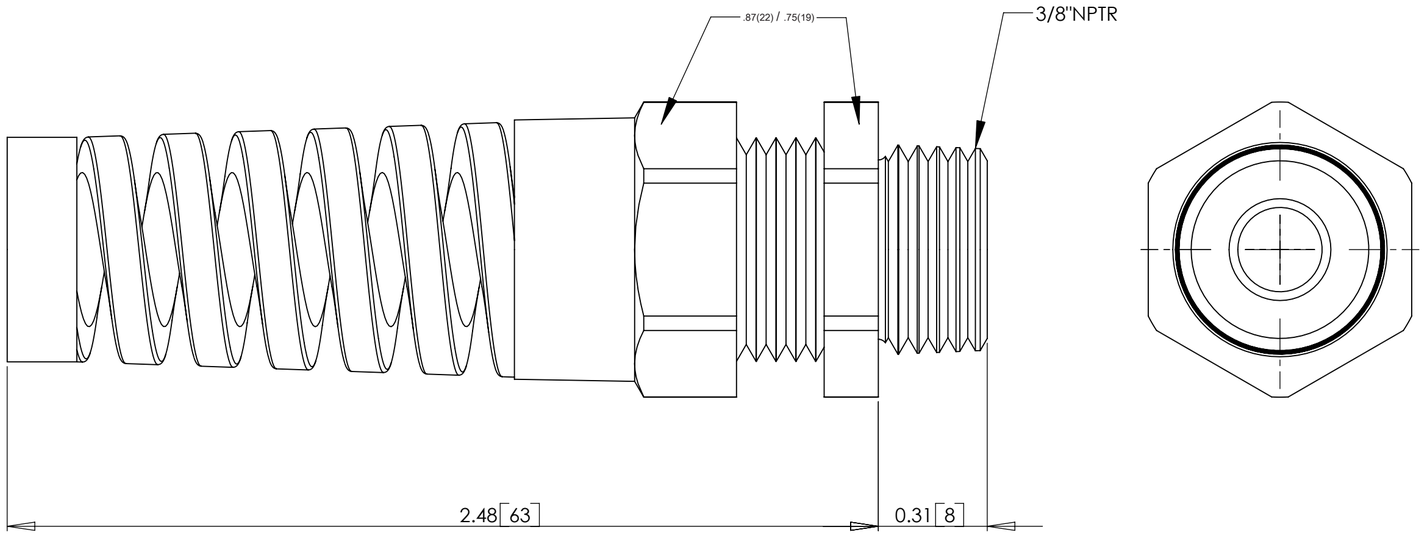

NOTES:

1) GENERAL DIMENSIONS DRAWINGS.

2) DIMENSIONS [ ] ARE IN INCHES.

3) DIMENSIONS NOTED ARE FOR REFERENCE ONLY.

Third angle projection

SEALCON

14853 E HINDSDALE AVE, SUITE d
CENTENNAIL, CO 80112-4240, USA
TEL: +1-303-699-1135
TOLL FREE: +1-800-456-9012
E MAIL: info@sealconusa.com ,
WEBSITE: WWW.SEALCONUSA.COM

hummel