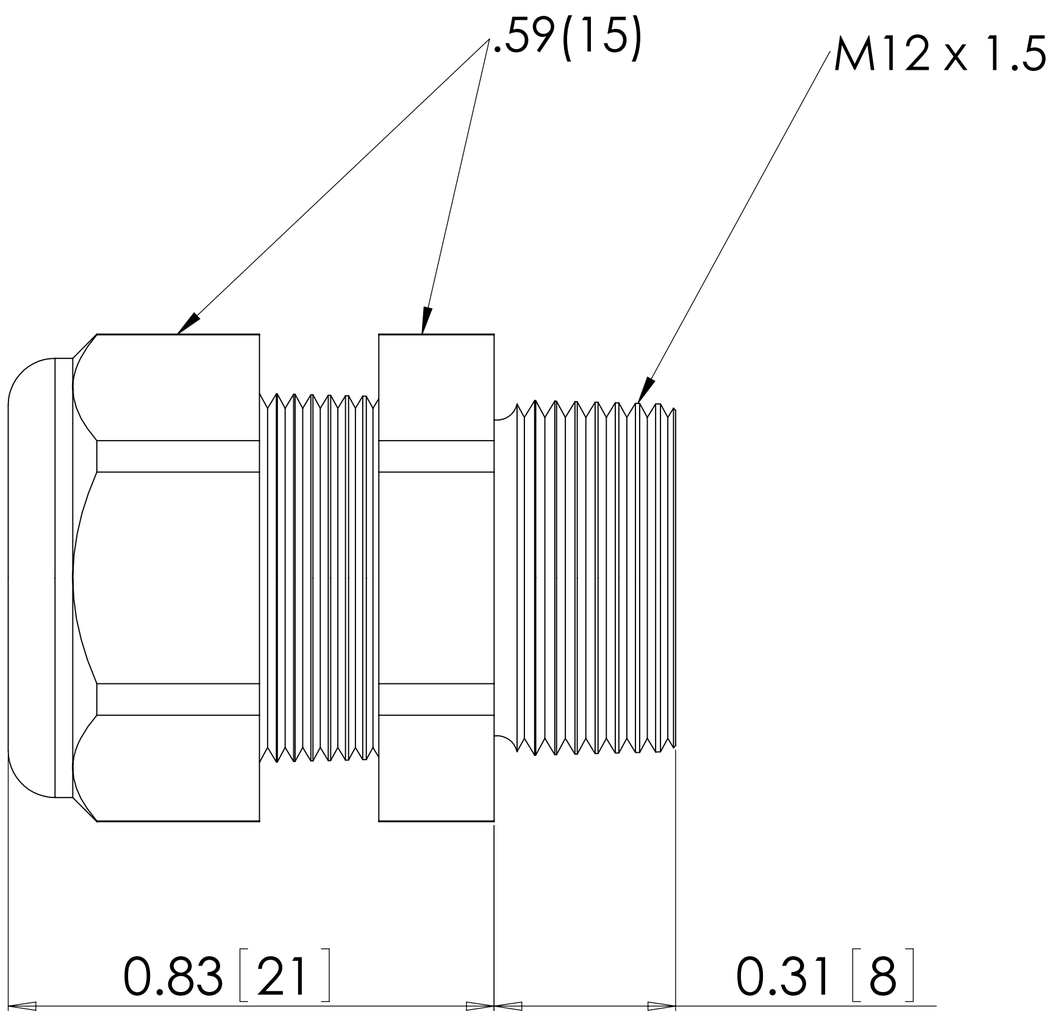

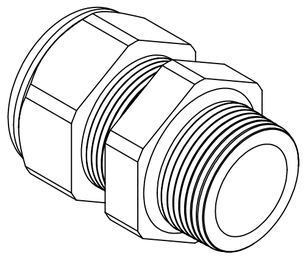

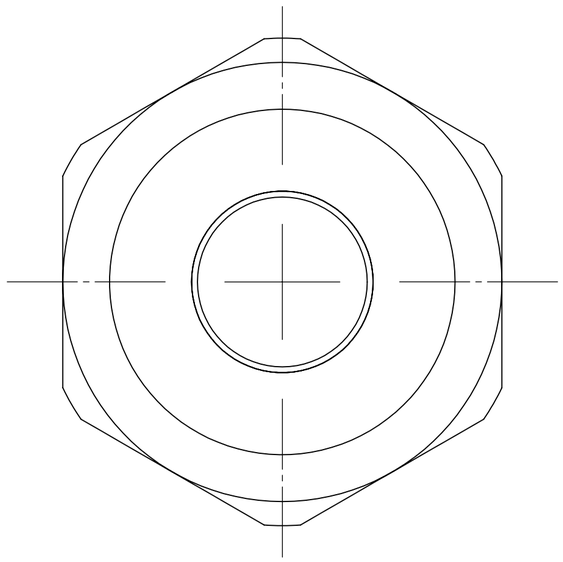

NOTES:

1) GENERAL DIMENSIONS DRAWINGS.

2) DIMENSIONS [ ] ARE IN MILLIMETER.

3) DIMENSIONS NOTED ARE FOR REFERENCE ONLY.

Third angle projection

SEALCON

14853 E HINDSDALE AVE, SUITE D
CENTENNIAL, CO 80112-4240, USA
TEL: +1-303-699-1135
TOLL FREE: +1-800-456-9012
E_MAIL: info@sealconusa.com ,
WEBSITE: www.sealconusa.com

HUMMEL